BCS Received 01/20/2026 ID 31952

Z:\PROJECTS FILES\2025 JOBS\250405 HOPE CENTENNIAL PARKING LOT EXPANSION\250405 E-0.1 ELECTRICAL INDEX, SYMBOL LEGEND AND NOTES PLAN.DWG by YAZMIN 9/29/2025 2:59:39 PM

GENERAL ELECTRICAL NOTES

(GENERAL NOTES ARE PROVIDED AS A BASIC DESCRIPTION OF THE EXTENT AND QUALITY EXPECTED IN THIS PROJECT. IF A CONFLICT EXISTS BETWEEN THESE GENERAL NOTES AND THE REMAINDER OF THE CONTRACT DOCUMENTS THE SPECIFICATIONS, PLANS AND DETAILS WILL GOVERN.)

1. THE ENTIRE INSTALLATION SHALL BE IN ACCORDANCE WITH THE FOLLOWING CODES AND STANDARDS:
   FLORIDA STATE FIRE MARSHALL'S RULE 69A-3.012 FAC AND
   RULE CHAPTER 69A-60 FLORIDA ADMINISTRATIVE CODE (FAC) AND
   FLORIDA STATUTE SECTION 633.022.
   A. NFPA 70: NATIONAL ELECTRICAL CODE (2020 EDITION)
   B. NFPA 72: NATIONAL FIRE ALARM CODE (2019 EDITION)
   C. NFPA 99: HEALTH CARE FACILITIES (2021 EDITION)
   D. NFPA 101: LIFE SAFETY CODE (2021 EDITION)
   E. NFPA 110: STANDARD FOR EMERGENCY AND STANDBY POWER SYSTEMS (2019 EDITION)
   F. NFPA 780: STANDARD FOR THE INSTALLATION OF LIGHTNING PROTECTION SYSTEMS (2020 EDITION)
   IN ADDITION, THE INSTALLATION SHALL ALSO BE IN ACCORDANCE WITH THE FOLLOWING:
   G. FLORIDA BUILDING CODE 2023 8th EDITION (FBC)
   H. THE GUIDELINES FOR DESIGN AND CONSTRUCTION OF HEALTH CARE FACILITIES (FGI GUIDELINES, 2018 EDITION)
   I. FLORIDA FIRE PREVENTION CODE (2023, 8th EDITION)
2. AS A MINIMUM, ALL EQUIPMENT SHALL MEET APPLICABLE STANDARDS, FOR THE TYPE OF EQUIPMENT AND INTENDED USE, OF THE FOLLOWING:
   A. AMERICAN NATIONAL STANDARDS INSTITUTE (ANSI)
   B. ILLUMINATING ENGINEERS SOCIETY (IES)
   C. AMERICAN SOCIETY FOR TESTING AND MATERIALS (ASTM)
   D. NATIONAL ELECTRICAL MANUFACTURER'S ASSOCIATES.(NEMA)
   E. NOTE: THESE STANDARDS ARE SUBORDINATE TO CODES AND STANDARDS SET BY U.L.
   ALL ELECTRICAL EQUIPMENT, DEVICES, WIRE, ETC., SHALL BE LISTED, FOR INTENDED USE, WITH UNDERWRITER'S LABORATORIES INC. (U.L.), WHERE STANDARDS HAVE BEEN ESTABLISHED BY U.L.
3. CONTRACTOR TO PROVIDE ALL LABOR, MATERIALS AND SUPERVISION NECESSARY TO ACCOMPLISH THE WORK AS SHOWN AND/OR NOTED ON THE DRAWINGS.
4. THE CONTRACTOR SHALL VISIT THE JOB SITE AND VERIFY ALL CONDITIONS, LOCATIONS, DIMENSIONS AND COUNTS AS SHOWN OR NOTED ON THE DRAWINGS, PRIOR TO SUBMITTING BID.
5. IT SHALL BE THE RESPONSIBILITY OF THE CONTRACTOR TO PROVIDE ALL LABOR, MATERIALS AND SUPERVISION NECESSARY TO ACCOMPLISH THE WORK AS SHOWN AND/OR NOTED ON THE PLANS.
6. ELECTRICAL CONTRACTOR SHALL NOT SCALE DRAWINGS. CONTRACTOR SHALL REFER TO ARCHITECTURAL PLANS AND ELEVATIONS FOR EXACT LOCATIONS OF ALL EQUIPMENT UNLESS NOTED OTHERWISE.
7. IT SHALL BE UNDERSTOOD THAT ALL WORK PERFORMED SHALL BE DONE BY A LICENSED CONTRACTOR AND IN A FIRST-CLASS MANNER. SAID CONTRACTOR SHALL MEET ALL REQUIREMENTS SET FORTH BY ANY LOCAL ORDINANCE AND GOVERNING AUTHORITIES.
8. THE CONTRACTOR SHALL PROVIDE ALL REQUIRED INSURANCE FOR PROTECTION AGAINST PUBLIC LIABILITY AND PROPERTY DAMAGE FOR THE DURATION OF THE WORK.
9. CONTRACTOR SHALL GUARANTEE ALL MATERIALS AND INSTALLATION FREE FROM DEFECTS FOR A PERIOD OF NOT LESS THAN ONE YEAR FROM DATE OF ACCEPTANCE, UNLESS INDICATED OR SPECIFIED OTHERWISE.
10. IT SHALL NOT BE THE INTENT OF THESE PLANS AND/OR SPECIFICATIONS TO SHOW EVERY MINOR DETAIL OF CONSTRUCTION. THE CONTRACTOR SHALL BE EXPECTED TO FURNISH AND INSTALL ALL ITEMS FOR A COMPLETE ELECTRICAL SYSTEM AND PROVIDE FOR ALL REQUIREMENTS NECESSARY FOR EQUIPMENT TO BE PLACED IN PROPER WORKING ORDER.
11. THE CONTRACTOR SHALL BE RESPONSIBLE FOR REPAIRING TO ORIGINAL CONDITIONS, ANY AND ALL DAMAGES TO BUILDING SURFACES, EQUIPMENT, ETC. CAUSED DURING THE PERFORMANCE OF WORK.
12. CORRECTION OF ANY DEFECTS SHALL BE COMPLETED WITHOUT ADDITIONAL CHARGE OR DELAYS AND SHALL INCLUDE REPLACEMENT OR REPAIR OF ANY OTHER PHASE OF THE INSTALLATION WHICH MAY HAVE BEEN DAMAGED THEREBY.
13. FOR ELECTRIC POWER SYSTEM, COORDINATE POWER SERVICE WITH POWER COMPANY;
   A. VERIFY LOCATION OF POWER SERVICE TERMINATION WITH POWER COMPANY, PRIOR TO SUBMITTING BID. CONTRACTOR TO VERIFY AVAILABLE SERVICE VOLTAGE AND PHASES WITH POWER COMPANY PRIOR TO BID AND PROVIDE BID ALLOWANCE FOR ALTERNATES.
   B. PROVIDE TEMPORARY ELECTRICAL SERVICE FOR USE BY ALL TRADES DURING CONSTRUCTION AND REMOVE SAME AT COMPLETION OF PROJECT,
14. CONTRACTOR SHALL KEEP ALL AREAS IN WHICH WORK IS BEING PERFORMED, FREE FROM DEBRIS AT ALL TIMES AND SAID AREAS SHALL BE LEFT BROOM CLEAN AT THE END OF EACH WORKING DAY.
15. CONTRACTOR SHALL PAY FOR ALL PERMITS, FEES, INSPECTIONS, AND TESTING COSTS.
16. COORDINATE ALL ELECTRICAL SITE WORK WITH ALL OTHER TRADES CONTRACTORS.
17. IT SHALL BE THE RESPONSIBILITY OF THE ELECTRICAL CONTRACTOR FOR THE ADVANCE ORDERING OF LONG LEAD ITEMS, AS TO NOT INTERFERE WITH THE PRODUCTION OF OTHER TRADES RESULTING IN ANY DOWN OR LAG TIME. THE CONTRACTOR SHALL NOT ORDER ANY ITEMS UNTIL APPROVED SHOP DRAWINGS ARE RETURNED.
18. ELECTRICAL CONTRACTOR SHALL SUBMIT EQUIPMENT LAYOUT DIGITAL SHOP DRAWINGS OF ALL ELECTRICAL SPACES, ROOMS, ETC., TO ENGINEER FOR APPROVAL PRIOR TO ORDERING EQUIPMENT OR INSTALLING CONDUITS, ETC. LAYOUT SHALL CONSIST OF PLAN VIEWS (SCALED AS REQUIRED) AND ELEVATIONS (DIMENSIONED) FOR EACH SUCH SPACE, ROOM, ETC.
19. CONTRACTOR SHALL SUBMIT AT ONE TIME, DIGITAL SHOP DRAWINGS/SUBMITTALS, INDEXED WITH ALL PRODUCTS, MATERIALS, LIGHTING FIXTURES, LAMPS, WIRING DEVICES, SWITCHGEAR, ETC. CLEARLY HIGHLIGHTING ALL EQUIPMENT QUANTITIES AND DETAILS. ALL EQUIPMENT SHALL BE AS SPECIFIED ON PLANS: THE RESPONSIBILITY TO ACCEPT OR REJECT ANY PROPOSED SUBSTITUTION REMAINS WITH THE PROJECT ENGINEER. THE CONTRACTOR MAY USE ANY ARTICLE, DEVICE, PRODUCT, OR MATERIAL WHICH IN THE JUDGMENT OF THE ENGINEER EXPRESSED IN WRITING ARE EQUAL TO THAT SPECIFIED.
20. ALL CONDUCTORS SHALL BE COPPER, TYPE THHN/THWN EXCEPT WHERE OTHERWISE REQUIRED BY U.L. OR CODES. MINIMUM WIRE SIZE SHALL BE #12 AWG, EXCLUDING CONTROL WIRING. ALUMINUM CONDUCTORS ARE NOT PERMITTED.
21. ALL CONDUCTORS SHALL BE IN CONDUITS. ALL CONDUITS SHALL BE GALVANIZED RIGID STEEL (GRS) EXCEPT THAT: (a) PVC CONDUITS MAY BE USED UNDERGROUND PROVIDED ELBOWS AND RISERS ARE GALVANIZED RIGID STEEL OR SCHEDULE 80 PVC, WHERE SUBJECT TO PHYSICAL DAMAGE (b) ELECTRICAL METALLIC TUBING (EMT) MAY BE USED IN OR ON WALLS OR CEILINGS WHERE NOT SUBJECT TO MECHANICAL DAMAGE, DAMP OR CORROSIVE CONDITIONS, (c) LIQUID TIGHT FLEXIBLE CONDUIT WHERE REQUIRED, (d) FLEXIBLE METALLIC CONDUIT WHERE REQUIRED IN DRY LOCATIONS ONLY, (e) MC CABLE WITH DEDICATED GREEN GROUNDING CONDUCTOR WHERE PERMITTED. ALL CONDUITS IN HAZARDOUS AREAS (PER NEC) SHALL MEET THE REQUIREMENTS OF NEC CHAPTER 5.
22. FOR UNDERGROUND ELECTRICAL CONDUITS, PROVIDE PULL BOXES, SUCH THAT NO SINGLE CONDUIT RUN HAS BENDS IN EXCESS OF 360. PULL BOXES SHALL BE SUITABLE AND APPROVED FOR THE INTENDED USE. WARNING TAPE WHICH SAYS "WARNING BURIED ELECTRIC" SHALL BE PLACED IN TRENCHES ABOVE ALL UNDERGROUND ELECTRIC CONDUITS. WHERE CONDUITS PASS UNDERNEATH PAVED AREAS, THE CONDUITS SHALL BE PVC. WHERE UNDERGROUND CONDUITS ARE NOT EXPOSED TO MECHANICAL DAMAGE OR ARE NOT UNDER PAVED AREAS, THE CONDUITS SHALL BE SCHEDULE 40 PVC.
23. ALL CONDUIT RUNS ARE SHOWN DIAGRAMMATIC. EXACT ROUTING SHALL BE DETERMINED IN THE FIELD, UNLESS OTHERWISE NOTED.
24. WIREWAYS SHALL BE SIZED AS REQUIRED, PER NEC, UNLESS OTHERWISE NOTED (UON).
25. WHERE CORE DRILLING OF FLOOR/WALLS IS REQUIRED, CONTRACTOR SHALL SEAL OPENINGS WATERTIGHT AFTER UTILITIES HAVE BEEN INSTALLED. LOCATION OF CORED HOLES SHALL COORDINATE WITH LOCATION OF EQUIPMENT IN A MANNER TO BE CLEAN AND FUNCTIONAL. THE CONTRACTOR SHALL INSTALL ONLY ONE CONDUIT PER HOLE AND SEAL THE OPENING AROUND THE CONDUIT AS SPECIFIED.
26. PROVIDE FIRE RETARDANT U.L. APPROVED SEALANT ON ALL PENETRATIONS OF FIRE RATED PARTITIONS, WALLS AND STRUCTURAL SLABS. CONTRACTOR TO VERIFY, PRIOR TO SUBMITTING BID, LOCATIONS OF ALL SUCH FIRE RATED PARTITIONS, WALL AND STRUCTURAL SLABS.
27. UNLESS NOTED AS EXISTING, ALL EQUIPMENT, WIRING, DEVICES, ETC. SHALL BE NEW.
28. ALL CIRCUIT BREAKERS SHALL BE INVERSE TIME TYPE (THERMAL MAGNETIC OR SOLID STATE AS REQUIRED BY SPECIFICATION). TWO AND THREE POLE CIRCUIT BREAKERS SHALL BE COMMON TRIP. NO TIE HANDLES PERMITTED.
29. ALL FUSES SHALL BE CURRENT LIMITING, PER U.L., RATED 600V., UON.
   A. NON-TIME DELAY FUSES IN MAIN SWITCHES AND SWITCHES FEEDING PANELS.
   B. TIME DELAY FUSES FOR MOTOR AND A/C CIRCUITS.
30. ALL DISCONNECT SWITCHES SHALL BE SIZED BY NEC REQUIREMENTS TO ACCOMMODATE EQUIPMENT SERVED, INCLUDING REQUIRED FUSES U.O.N. SWITCHES SHALL BE HORSEPOWER RATED FOR MAX. HORSEPOWER, HEAVY DUTY TYPE.
31. CONTRACTOR SHALL VERIFY CIRCUIT PROTECTIVE DEVICE RATING FOR EQUIPMENT PRIOR TO INSTALLATION.
32. FURNISH AND INSTALL DISCONNECT SWITCHES AND WIRING FOR AIR CONDITIONING SYSTEM AS PER MANUFACTURER RECOMMENDATIONS. CONTROLS ARE TO BE SUPPLIED BY AIR CONDITIONING CONTRACTOR AND CONNECTED. PROVIDE ALL CONTROL WIRING FOR A/C SENSORING AND CONTROL UNITS, COORDINATE WITH A/C CONTRACTOR FOR WIRING DIAGRAMS AND EXACT MOUNTING LOCATIONS.
33. ALL ELECTRICAL EQUIPMENT SHALL BE RAINTIGHT WHERE EXPOSED TO THE WEATHER. ALL FLEX CONDUITS CONNECTED TO SUCH EQUIPMENT SHALL BE LIQUID TIGHT.
34. EQUIPMENT SHALL BE OF MATERIALS SUITABLE FOR AND NEMA RATED FOR THE ENVIRONMENT IN WHICH THEY ARE TO BE INSTALLED.
35. ALL CONNECTIONS TO GROUND RODS SHALL BE MADE WITH U.L. APPROVED WELDED CONNECTIONS, UNLESS NOTED OTHERWISE. THE CONTRACTOR SHALL FORM A GROUNDING ELECTRODE SYSTEM AS PER NEC 250-50.
36. OUTLET IN DRY LOCATIONS BOXES SHALL BE PRESSED STEEL, IN WET OR DAMP LOCATIONS SHALL BE CAST ALLOY WEATHER-RESISTANT OUTLET WITH THREADED HUBS AND IN OTHER CLASSIFIED AREAS IT SHALL BE IN A SPECIAL ENCLOSURE. PROPER PLASTER RINGS SHALL BE USED WITH OUTLET BOXES. PROPER COORDINATION BETWEEN ELECTRICAL SUBCONTRACTOR AND GENERAL CONTRACTOR FOR PLASTER RING INITIATION WILL BE REQUIRED. NO "GOOF" RINGS SHALL BE ALLOWED. ALL OUTLET BOXES SHALL BE SECURELY FASTENED.
37. WHEN ELECTRICAL BOXES ARE LOCATED IN VERTICAL FIRE RESISTIVE ASSEMBLIES, (CLASSIFIED AS FIRE/SMOKE AND SMOKE PARTITIONS), THEY SHALL BE INSTALLED WITHOUT AFFECTING THE FIRE CLASSIFICATION. ALL OF THE FOLLOWING CONDITIONS SHALL BE MET:
   A. ALL ELECTRICAL BOXES SHALL BE METALLIC.
   B. BOX OPENING SHALL OCCUR ONLY ON ONE SIDE OF FRAMING SPACE.
   C. BOX OPENING SHALL NOT EXCEED 10322.56 SQUARE MM (16SQUARE INCHES).
   D. ALL CLEARANCES BETWEEN OUTLET BOX AND GYPSUM BOARD SHALL BE COMPLETELY FILLED WITH JOINT COMPOUND (OR OTHER APPROVED MATERIAL).
   E. PROVIDE A WALL AROUND OUTLETS LARGER THAT 10322.56 SQUARE MM (16 SQUARE INCHES). THE INTEGRITY OF THE WALL RATING SHALL BE MAINTAINED.
   F. THE TOTAL AGGREGATE SURFACE AREA OF THE BOXES SHALL NOT EXCEED 64516 SQUARE MM (100 SQUARE INCHES) PER 9.29 SQUARE METERS (100 SQUARE FEET).
   G. OUTLET BOXES LOCATED ON OPPOSITE SIDES OF FIRE RESISTIVE ASSEMBLIES SHALL BE SEPARATED BY A MINIMUM HORIZONTAL DISTANCE OF 609.6MM (24 INCHES).
   H. OUTLET BOXES SHALL BE SECURELY FASTENED TO WALL FRAMING MEMBERS.
   I. THE OPENING IN THE GYPSUM BOARD FACING SHALL BE CUT NOT TO EXCEED 3.175MM (1/8 INCH) BETWEEN THE EDGES OF THE OUTLET BOX AND THE EDGES OF THE OPENING.
38. SMOKE DETECTORS SHALL BE PROVIDED NO CLOSER THAN 36" FROM SUPPLY AIR DIFFUSERS.
39. CONTRACTOR SHALL PROVIDE A TYPE WRITTEN DIRECTORY OF EACH PANELBOARD. HAND WRITTEN DIRECTORY IS NOT ACCEPTABLE, EXCEPT SPARE AND SPACES SHALL BE HANDWRITTEN IN PENCIL.
40. PROVIDE A 4" STEEL REINFORCED CONCRETE HOUSEKEEPING PAD UNDER ALL FLOOR MOUNTED ELECTRICAL EQUIPMENT.
41. A. WORKING CLEARANCES FOR ELECTRICAL EQUIPMENT SHALL BE IN COMPLIANCE WITH NEC 110.26
   B. THE EXCLUSIVELY DEDICATED SPACE EXTENDING FROM FLOOR TO STRUCTURAL CEILING WITH A WIDTH AND DEPTH OF THE PANELBOARD OR SWITCHBOARD MUST BE CLEAR OF ALL PIPING, DUCTS, EQUIPMENT FOREIGN TO THE ELECTRICAL EQUIPMENT OR ARCHITECTURAL APPURTENANCES IN ACCORDANCE WITH NEC 408.
42. METER CANS, HUBS, & LUGS FOR SAME ARE TO BE FURNISHED & INSTALLED BY CONTRACTOR. CONTRACTOR TO VERIFY SPECIFIC TYPE OF METER CAN TO BE USED WITH F.P.L. PRIOR TO BID.
43. A. PROVIDE A PERMANENT SIGN ON THE MAIN ELECTRICAL ROOM DOOR TO THE BLDG. STATING THAT THE SERVICE DISCONNECTS ARE LOCATED INSIDE.
   B. SIGNS SHALL BE PLACED AT THE MAIN DISCONNECT EQUIPMENT INDICATING TYPE AND LOCATION OF ON-SITE EMERGENCY POWER SOURCES.
44. THE EQUIPMENT GROUNDING TERMINAL BARS OF THE NORMAL AND EMERGENCY ELECTRICAL SYSTEM PANELBOARDS SERVING THE SAME BUILDING SHALL BE BONDED TOGETHER WITH AN INSULATED, CONTINUOUS, COPPER CONDUCTOR NOT SMALLER THAN NUMBER 6.
45. THE ELECTRICAL CONTRACTOR SHALL FURNISH A COMPLETE SET OF AS-BUILT DRAWINGS, SHOWING ALL CHANGES AND DEVIATIONS TO THE ARCHITECT/ENGINEER PRIOR TO COMPLETION OF THE PROJECT.
46. ARCHITECTURAL AND/OR ENGINEERING EXPENSES THAT ARE INCURRED DUE TO REVISIONS OR SUBSTITUTIONS REQUESTED BY THE CONTRACTOR SHALL BE PAID FOR BY THAT CONTRACTOR.
47. FOR TELEPHONE SYSTEMS:
   A. PROVIDE GROUNDING FOR ALL TELEPHONE OUTLETS AND EQUIPMENT PER REQUIREMENTS OF THE TELEPHONE COMPANY.
   B. COORDINATE INSTALLATION OF ALL TELEPHONE OUTLETS, RACEWAYS, ENCLOSURES AND BACKBOARDS WITH TELE. CO.
   C. VERIFY LOCATION OF TELEPHONE SERVICE WITH TELEPHONE COMPANY. PROVIDE SERVICE CONDUIT TO BLDG. FROM SERVICE POINT PER TELCO. INSTRUCTIONS, INCLUDE ALL ASSOCIATED COSTS IN BID.
   D. MARK TERMINATIONS OF TELEPHONE CONDUIT AS DIRECTED BY THE TELEPHONE COMPANY.
   E. VERIFY LOCATION OF TELEPHONE SERVICE WITH TELEPHONE COMPANY PRIOR TO SUBMITTING BID, INCLUDE ALL ASSOCIATED COSTS IN BID.
   F. USE EXTERIOR GRADE 3/4" PLYWOOD BACKBOARDS FOR MOUNTING TELEPHONE EQUIPMENT AND TERMINAL STRIPS. PAINT BOARD ON ALL SIDES AND EDGES WITH TWO COATS OF FLAT BLACK FIRE RETARDANT PAINT.
48. INDUSTRIAL CONTROL TYPE TRANSFORMERS SHALL BE PROVIDED WITH FINGERSAFE COVERS AND PRIMARY FUSE PROTECTION AS REQUIRED PER NEC 450-3. MOUNT TRANSFORMERS ON 4"X4" JUNCTION BOX ABOVE ACCESSIBLE CEILINGS OR ELECTRICAL ROOMS.
49. DWELLING UNITS: ALL 120-VOLT SINGLE-PHASE, 15&20A. BRANCH CIRCUITS SUPPLYING OUTLETS OR DEVICES INSTALLED IN DWELLING UNIT KITCHENS, FAMILY ROOMS, DINING ROOMS, LIVING ROOMS, PARLORS, LIBRARIES, DENS, BEDROOMS, SUNROOMS, RECREATION ROOMS, CLOSETS, HALLWAYS, LAUNDRY AREAS, OR SIMILAR ROOMS OR AREAS SHALL BE PROTECTED BY ARC-FAULT TECHNOLOGY IN ACCORDANCE WITH NEC 210.12(A) 1-6.
50. PROVIDE U.L. LISTED COMPOUND APPLIED TO BACK OF "BACK TO BACK" BOXES IN RATED WALLS WHERE THE BOXES ARE LESS THAN 609.6MM (24 INCHES) APART MEASURED HORIZONTALLY.
51. CONTRACTOR SHALL PROVIDE TYPED, UPDATED PANEL DIRECTORIES ON ALL PANELS THAT ARE AFFECTED AT THE COMPLETION OF THE JOB.
52. FOR RECEPTACLES IN DAMP AND WET LOCATIONS THE CONTRACTOR SHALL PROVIDE ALL 125V. AND 250V., 15A. AND 20A. RECEPTACLES THAT ARE LISTED AS WEATHER RESISTANT TYPE TO COMPLY WITH NEC ARTICLE 406.8.
53. SERVICE EQUIPMENT IN OTHER THAN DWELLING UNITS SHALL BE LEGIBLY MARKED IN THE FIELD WITH THE MAXIMUM AVAILABLE FAULT CURRENT. THE FIELD MARKING(S) SHALL INCLUDE THE DATE THE FAULT CURRENT CALCULATION WAS PERFORMED AND BE OF SUFFICIENT DURABILITY TO WITHSTAND THE ENVIRONMENT INVOLVED. COMPLY FULLY WITH NEC 110.16.
54. VOLTAGE DROP
   1. CONDUCTORS FOR ALL FEEDERS SHALL BE INCREASED FROM SIZES INDICATED ON DRAWINGS TO PREVENT VOLTAGE DROP EXCEEDING 2%.
   2. CONDUCTORS FOR ALL BRANCH CIRCUITS SHALL BE INCREASED FROM SIZES INDICATED ON DRAWINGS TO PREVENT VOLTAGE DROP EXCEEDING 3%. FROM THE FURTHEST DEVICE.
   3. DETERMINING CONDUCTOR SIZES SHALL BE BASED ON 80% OF THE BREAKER RATING.
   4. FOR DETERMINATION OF WIRE SIZE FOR BID PURPOSES:
      * INCREASE WIRE BY 1 WIRE SIZE FOR RUNS 60 FT. TO 100 FT.
      * INCREASE WIRE BY 2 WIRE SIZES FOR RUNS 100 FT. TO 150 FT.
      * INCREASE WIRE BY 3 WIRE SIZES FOR RUNS FROM 150 FT. TO 230 FT.

GENERAL LIGHTING NOTES:

1. CONTRACTOR SHALL COMPLY WITH 2023 FBC SECTION R404.1. MINIMUM OF 90% OF THE PERMANENTLY INSTALLED LIGHTING FIXTURES SHALL BE HIGH-EFFICIENCY LAMPS. MIN. 65L/W..
2. REFER TO ARCHITECTURAL REFLECTED CEILING PLAN FOR EXACT LOCATION OF LIGHT FIXTURES.
3. COORDINATE TYPE OF CEILING FOR EACH FIXTURE WITH ARCHITECTURAL REFLECTED CEILING PLANS AND PROVIDE FIXTURE TRIM AS REQUIRED.
4. ALL LED DOWNLIGHTS SHALL USE LAMPS WITH 3500K TEMPERATURE, MINIMUM 30,000 HOUR LIFE, FOR LAMPS AND DRIVERS.
5. PROVIDE APPROVED FIRE RATED ENCLOSURES FOR ALL LIGHT FIXTURES LOCATED IN FIRE RATED CEILINGS.
6. FIXTURES IN AREAS WITHOUT CEILINGS, OR IN MECHANICAL AND ELECTRICAL ROOMS SHALL BE MOUNTED WITH 1 ½"X1 ½"KINDORF CHANNEL SUPPORT SUSPENDED FROM ROOF STRUCTURE WITH THREAD RODS. FIXTURES SHALL BE MOUNTED 10'-0" A.F.F.
7. ALL ACRYLIC LENSED FIXTURES SHALL HAVE A LENS THICKNESS OF .125 INCHES MINIMUM.
8. HALF SHADED FIXTURES DENOTE EMERGENCY FIXTURES EITHER WITH 1100 LUMEN EMERGENCY BATTERY PACK OR ON LIFE SAFETY CIRCUIT.
9. LIGHTING FIXTURE SCHEDULE IS PREDICTED ON PERFORMANCE AND IS DESIGNED TO MEET CERTAIN AESTHETIC CRITERIA. ALL ALTERNATIVE SELECTIONS MUST BE SUBMITTED FOR PRIOR APPROVAL TEN (10) DAYS PRIOR TO BID DATE.
10. ALL BALLASTS SHALL HAVE MINIMUM POWER FACTOR OF 0.90. ALL BALLASTS FOR METAL HALIDE AND HIGH PRESSURE SODIUM FIXTURES SHALL BE CONSTANT WATTAGE TYPE WITH +/-5% LAMP WATTS FOR +/-10% NOMINAL LINE VOLTAGE VARIATION.
11. PROVIDE LAMPS WITH FIXTURES, VERIFY LAMP TYPE WITH MANUFACTURER.
12. FLUORESCENT LUMINAIRES THAT UTILIZE DOUBLE-ENDED LAMPS AND CONTAIN BALLAST(S) OR MULTIWIRE BALASTED LUMINAIRES SHALL CONTAIN AN INTEGRATED INTERNAL DISCONNECT AND TO BE COMPLIED WITH NEC 410.130(G).
13. ALL OPENINGS FOR LIGHT FIXTURES IN CEILINGS SHALL BE PROTECTED IN A MANNER (PER ALL GOVERNING CODES) THAT WILL PROVIDE THE SAME RATING AS THE CEILING. (THIS APPLIES TO ALL FIRE RATED CEILINGS).
14. FOR EMERGENCY EXIT SIGNS AND EMERGENCY BATTERY PACKS MAKE CONNECTION TO THE GENERAL LIGHTING CIRCUIT IN THE IMMEDIATE AREA; AHEAD OF ALL SWITCHES AND CONTROLS.
15. PROVIDE A FUSE HOLDER AND FUSE (BUSSMAN HEB AND FNQ OR EQUAL), IN THE PRIMARY SIDE OF EACH UNGROUNDED CONDUCTOR FOR ALL BALLASTS AT THE HAND HOLE OF EACH EXTERIOR POLE MOUNTED LIGHTING FIXTURE OR J-BOX FOR WALL OR GROUND MOUNTED FIXTURE.
16. PROVIDE WIND LOAD RATED LIGHT POLES WITH 170 MPH MINIMUM WIND SPEED (ASCE 7), EXPOSURE C WITH IMPORTANCE FACTOR OF 1.0, AND PROVIDE PHOTOMETRICS WITH ALL FIXTURE SUBMITTALS. CONTRACTOR TO VERIFY VOLTAGES OF ALL LIGHT FIXTURES PRIOR TO BIDDING.
17. PHOTOMETRICS ARE BASED ON MANUFACTURER'S INFORMATION AND CATALOG NUMBERS. ALTERNATIVE MANUFACTURERS MUST PROVIDE THE IESNA FORMAT ELECTRONIC FILES OF THE INDEPENDENT TEST LAB REPORTS FOR THE PROPOSED FIXTURES 10 WORKING DAYS PRIOR TO BID. (SPECIFIER) WILL CONFIRM THAT THE PHOTOMETRIC CRITERIA HAS BEEN MET, AND IF ALTERNATE IS APPROVED WILL ISSUE AN ADDENDUM. MANUFACTURERS NOT LISTED ON THE PLANS OR IN AN ADDENDUM WILL NOT BE ACCEPTED.
18. TO CONFIRM THAT THE SPECIFIED PHOTOMETRIC CRITERIA HAS BEEN MET, PHOTOMETRIC DRAWINGS FOR THE PROPOSED ALTERNATE MUST BE SUBMITTED TO (SPECIFIER) FOR EVALUATION NO LESS THAT 10 DAYS PRIOR TO BID. ANY ACCEPTABLE ALTERNATE MUST BE APPROVED IN WRITING PRIOR TO BID DATE.
19. CONTRACTOR MUST BID PROJECT USING SPECIFIED LIGHTING FIXTURES AS BASE BID (NO EXCEPTIONS). IF ALTERNATE FIXTURES ARE PROPOSED, THEY MUST BE BID AS AN ALTERNATE BID MUST INCLUDE:
   A) TOTAL DOLLAR CREDIT TO OWNER IF ALTERNATE IS ACCEPTED.
   B) LINE ITEM CREDIT FOR EACH ALTERNATE FIXTURE PROPOSED.
   C) CATALOG SUBMITTAL DATA FOR EACH ALTERNATE FIXTURE PROPOSED.
20. IF THERE IS A DISCREPANCY BETWEEN A FIXTURE DESCRIPTION AND GENERAL NOTES, AND THE CATALOG NUMBER LISTED, THE FIXTURE DESCRIPTION AND GENERAL NOTES SHALL GOVERN.
21. COORDINATE FIXTURE TYPES WITH ARCHITECTURAL DRAWINGS.
22. INTERNALLY ILLUMINATED EXIT SIGNS SHALL NOT EXCEED 5 WATTS PER SIDE.
23. RECESSED LUMINAIRES INSTALLED IN THE BUILDING THERMAL ENVELOPE SHALL BE SEALED TO LIMIT AIR LEAKAGE BETWEEN CONDITIONED AND UNCONDITIONED SPACES. ALL RECESSED LUMINAIRES SHALL BE IC-RATED AND LABELED AS MEETING ASTM E 283 WHEN TESTED AT 75 Pa PRESSURE DIFFERENTIAL WITH NO MORE THAN 2.0 CFM OF AIR MOVEMENT FROM THE CONDITIONED SPACE TO THE CEILING CAVITY. ALL RECESSED LUMINAIRES SHALL BE SEALED WITH A GASKET OR CAULK BETWEEN THE HOUSING AND THE INTERIOR WALL OR CEILING COVERING.
24. ALL EXTERIOR PARKING LIGHTING SHALL MEET IES ILLUMINATION STANDARDS AND LOCAL CODE REQUIRED FOOTCANDLE LEVELS. ILLUMINATION LEVELS SHALL BE MEASURED WITH A FOOTCANDLE METER AT COMPLETION OF THE PROJECT BY A REGISTERED PROFESSIONAL ENGINEER AND SAID ENGINEER SHALL ISSUE A LETTER ATTESTING TO COMPLIANCE WITH ALL CODE REQUIREMENTS.
25. THE CONTRACTOR SHALL SUBMIT PHOTOMETRICS FOR MEANS OF EGRESS ILLUMINATION MEETING REQUIREMENTS OF FBC 1008.1. 1FC UNDER NORMAL POWER; UNDER EMERGENCY POWER, 1FC AVERAGE, AND 0.1FC MINIMUM.
26. ALL LUMINAIRES INSTALLED IN WET LOCATIONS SHALL BE MARKED "SUITABLE FOR WET LOCATIONS". ALL LUMINAIRES INSTALLED IN DAMP LOCATIONS SHALL BE MARKED "SUITABLE FOR WET LOCATIONS" OR "SUITABLE FOR DAMP LOCATIONS" IN COMPLIANCE WITH N.E.C. 410.4A.

ELECTRICAL SYMBOL LEGEND

SYMBOL	DESCRIPTION
	LIGHTING (REFER TO LIGHTING FIXTURE SCHEDULE)
A	LIGHT FIXTURE DESIGNATION.
	LIGHTING FIXTURE, SURFACE MOUNTED
	LIGHTING FIXTURE, RECESSED MTD.
	LIGHTING FIXTURE, WALL MOUNTED
	EXIT LIGHT FIXTURE. DIRECTION ARROWS AS SHOWN
	WALL MOUNTED EXIT LIGHT FIXTURE (SHADED QUADRANT INDICATES FACE(S) OF FIXTURE)
	2 X 2 LIGHT FIXTURE
	2 X 4 LIGHT FIXTURE
	DIAGONAL SHADING DENOTES LIGHT FIXTURE CONNECTED TO EMERGENCY BRANCH CIRCUIT OR, W/EMERG. 90 MIN. BATTERY PACK.
	1 X 4 LIGHT FIXTURE
	DIAGONAL SHADING DENOTES LIGHT FIXTURE CONNECTED TO EMERGENCY BRANCH CIRCUIT OR, W/EMERG. 90 MIN. BATTERY PACK.
	WALL MOUNTED FIXTURE WITH WALL OUTLET BOX
	STRIP FIXTURE
	DIAGONAL SHADING DENOTES LIGHT FIXTURE CONNECTED TO EMERGENCY BRANCH CIRCUIT OR, W/EMERG. 90 MIN. BATTERY PACK.
	EXTERIOR LIGHT FIXTURE WITH ARMS AS SHOWN ON DRAWINGS
	EMERGENCY BATTERY WALL PACK WITH TWIN HEADS
$	TOGGLE SWITCH 120/277V. 20 AMP.,(M.H. = 48" A.F.F.)
$3	TOGGLE SWITCH 120/277V. 20 AMP. ,(M.H. = 48" A.F.F.) , 3-WAY
$4	TOGGLE SWITCH 120/277V. 20 AMP., (M.H. = 48" A.F.F.), 4-WAY
$B	LIGHTING CONTROL BY-PASS SWITCH, (MAX. 2 HOUR OVER-RIDE).
$K	TOGGLE SWITCH 120/277V. 20 AMP. KEYSWITCH, (M.H. = 48" A.F.F.)
$F	FAN SWITCH 120/277V. 20 AMP, (HORSEPOWER RATED)
$T	30-MINUTE ROTATABLE TIMER SWITCH (M.H. = 48" A.F.F.)
$P	TOGGLE SWITCH 120/277V. 20 AMP., WITH PILOT LIGHT, (M.H.=48"A.F.F.)
$EX	TOGGLE SWITCH 120/277V. 20 AMP. EXPLOSION-PROOF, (M.H.=48"A.F.F.)
$S	SPEED SWITCH 120/277V. 20 AMP. U.O.N. ,(M.H. = 48" A.F.F.)
$M	SINGLE PHASE MANUAL MOTOR STARTER, (M.H.=48" A.F.F.)
$D	DIMMER SWITCH 120/277V. 20 AMP., (M.H.=48" A.F.F.) (1500 WATTS UNLESS OTHERWISE INDICATED)
$3D	THREE-WAY DIMMER SWITCH (48" A.F.F.)
$a	SINGLE POLE SWITCH (48" A.F.F.) (SUBSCRIPT INDICATES ITEM CONTROLLED)
P	PANIC SWITCH, MUSHROOM TYPE, (M.H.=48" A.F.F.)
a,b	WALL MOUNTED - OCCUPANCY SENSOR SWITCH,(M.H.=48"A.F.F.)MFGR./MODEL# SENSOR SWITCH/#WSD-PDT (a, b) OR (2) INDICATES TWO POLE SWITCH - WSD-PDT-2P LV INDICATES LOW VOLTAGE - WSD-PDT-LV
OS	CEILING MOUNTED OCCUPANCY SENSOR - LIGHTING CIRCUIT CONTROLLER. MFGR./MODEL# (SENSOR SWITCH/#CM-PDT)
OS E	CEILING MOUNTED DUAL TECHNOLOGY EXTENDED RANGE OCCUPANCY SENSOR - LIGHTING CIRCUIT CONTROLLER. SENSOR SWITCH/#CM-PDT-10.
OS	WALL MOUNTED - OCCUPANCY SENSOR (M.H.=96"A.F.F.) MFGR./MODEL#WV-PDT
PP	POWER PACK

OCCUPANCY SENSOR NOTE:
CONTRACTOR SHALL PROVIDE ALL SWITCHPACKS AND CONDUCTORS AS REQUIRED FOR LAYOUTS AND CONTROLS SHOWN ON PLANS.

IT IS THE SOLE RESPONSIBILITY OF THE CONTRACTOR TO PROVIDE AND INSTALL A COMPLETE AND FULLY FUNCTIONAL LIGHTING CONTROL SYSTEM IN ACCORDANCE WITH THE PLANS, DETAILS, INTENT OF THE DESIGN AND SPECIFICATIONS SHOWN ON THESE PLANS.

SYMBOL	DESCRIPTION
	BASIC MATERIALS
	DUPLEX RECEPTACLE, 20 AMP., 125V., (M.H.=18"A.F.F.)
	FLOOR OUTLET BOX AND DUPLEX RECEPTACLE 20 AMP., 125V., WITH APPROPRIATE FLANGE.
	CEILING OUTLET BOX AND DUPLEX RECEPTACLE 20A, 125V.
	DUPLEX RECEPTACLE, 20 AMP., 125V., TOP HALF SWITCHED, M.H. = 18" A.F.F. UNLESS OTHERWISE NOTED
	DUPLEX RECEPTACLE, 20 AMP., 125V., ISOLATED GROUND AND SURGE PROTECTED, (M.H.=18"A.F.F.)
	SINGLE RECEPTACLE, 20 AMP., 125V., COORDINATE M.H. WITH EQUIPMENT.
EWC	SIMPLEX RECEPTACLE (16" A.F.F.) (EWC DENOTES ELECTRIC WATER COOLER. COORDINATE WITH EWC INSTALLER FOR MOUNTING HEIGHT)
	TWO DUPLEX RECEPTACLES WITH COMMON COVER 20A., 125V.,(18" A.F.F.)
	TWO DUPLEX RECEPTACLES WITH COMMON COVER 20A., 125V.,(42" A.F.F.)
	DUPLEX RECEPTACLE, 20 AMP., 125V., MOUNT ABOVE COUNTER @42"AFF.
	SPECIAL PURPOSE OUTLET e.g. RANGE OUTLET, COORD. W/ EQUIPT.
	GFCI DUPLEX RECEPTACLE, 20 AMP., 125V., (M.H.=18"A.F.F.)
	GFCI DUPLEX RECEPTACLE, 20 AMP., 125V., MTD. ABOVE COUNTER (VERIFY HEIGHT)
	30 AMP., 125V., TWIST LOCK RECEPTACLE FOR FLOOR POLISHING MACHINE
J	JUNCTION BOX, MOUNTING AS SHOWN
	POWER POLE
5	ELECTRIC MOTOR, NUMBER INDICATES HORSEPOWER
	MAGNETIC MOTOR STARTER OR CONTACTOR,
	COMBINATION MAGNETIC MOTOR STARTER, SIZE AS NOTED
3 100 *	DISCONNECT SWITCH, SIZE AS NOTED: # OF POLES; AMP RATING/FRAME; FUSE SIZE (* DENOTES AS PER MANUFACTURER). ENCLOSURE TYPE: NEMA 3R- FOR EXTERIOR; NEMA 1- FOR INTERIOR
	LIGHTING CONTROL TIME CLOCK
	PHOTOCELL, MOUNTED ON ROOF FACING NORTH
X	SHUNT-TRIP BUTTON - FLUSH MOUNTED UNLESS OTHERWISE NOTED
	PLUG-IN STRIP WITH RECEPTACLES, 18" O.C. UNLESS OTHERWISE INDICATED
	CABLE TRAY
	GROUND OR GROUND ROD AS NOTED
	CONDUIT TURNING UP
	CONDUIT TURNING DOWN
	CONDUIT STUB
	CONDUIT CONTINUED

NOTE: SOME SYMBOLS SHOWN ON THIS LEGEND MAY NOT PERTAIN TO THIS PROJECT.

TO THE BEST OF THE ENGINEER'S KNOWLEDGE, THE PLANS AND SPECIFICATIONS COMPLY WITH THE APPLICABLE MINIMUM BLDG. CODES AND APPLICABLE FIRE-SAFETY STANDARDS AS DETERMINED BY THE LOCAL AUTHORITY IN ACCORDANCE WITH SECTION 110.3.7.4.4 AND CHAPTER 633, FLORIDA STATUES.

SYSTEMS SYMBOL LEGEND

SYMBOL	DESCRIPTION
	CALL BACK PUSH BUTTON
	CIRCUIT BREAKER, TYPE AND SIZE AS PER DRAWINGS.
KP	SECURITY SYSTEM KEYPAD
C	CLOCK
B	BELL
R	AIR HANDLING UNIT SHUT-DOWN RELAY
R	POWER ON INDICATOR WITH KEYED RESET
	SERVICE AND DISTRIBUTION
	ELECTRICAL BRANCH CIRCUIT PANELBOARD, RECESS MOUNTED. (SEE PANEL SCHEDULE FOR DETAILS)
	ELECTRICAL BRANCH CIRCUIT PANELBOARD, SURFACE MOUNTED. (SEE PANEL SCHEDULE FOR DETAILS)
T	TRANSFORMER, SIZE AS NOTED
	AUTOMATIC TRANSFER SWITCH
	EXISTING EQUIPMENT TO REMAIN
	NEW EQUIPMENT OR WORK OF THIS PROJECT
	TELEPHONE/COMPUTER RACEWAY SYSTEM
	TELEPHONE/COMPUTER TERMINAL BOARD "TTB"
S	INTERCOM SYSTEM SPEAKER
	COMPUTER/TELEPHONE OUTLET WITH (2) 8-CONDUCTOR RJ-45 JACKS IN A SINGLE-GANG BOX MOUNTED AT 18" A.F.F. C = ABOVE THE COUNTER; P = PUBLIC PAY (48" A.F.F.); W = WALL MOUNTED (18" A.F.F.)
	DATA/TELEPHONE PORT - CEILING MOUNTED
	DATA/TELEPHONE PORT - FLOOR MOUNTED
TV	TELEVISION SIGNAL WALL OUTLET (M.H. = 18" A.F.F.) WITH 8-CONDUCTOR RJ-45 JACK AND F-TYPE RG6 COAX JACK IN SINGLE-GANG BOX.
TV	TELEVISION SIGNAL WALL OUTLET F-TYPE RG6 COAX JACK & COMPUTER/TELEPHONE OUTLET (2) 8-CONDUCTOR RJ-45 JACKS IN SINGLE-GANG BOX. (18" A.F.F.)
	SECURITY SYSTEM
	SECURITY SYSTEM CAMERA, PROVIDE POWER AND SIGNAL CONNECTION, SEE SPECS.
	SECURITY SYSTEM MONITORS AND RECORDERS, SEE SPECS.
CR	SECURITY SYSTEM CARD READER, SEE SPECS.
	SECURITY SYSTEM CABLES IN CONDUIT, SEE SPECS.
J S	SECURITY SYSTEM JUNCTION BOX AT ACCESSIBLE LOCATION.
	SECURITY SYSTEM HIDDEN PUSH BUTTON FOR DOOR STRIKE RELEASE, COORDINATE INSTALLATION WITH FURNITURE OR EQUIPMENT.
S	SECURITY SYSTEM SPEAKER WITH INTEGRAL MICROPHONE
KB	SECURITY SYSTEM KNOX BOX
	FIRE ALARM/DETECTION SYSTEM
P	FIRE ALARM MANUAL PULL STATION 48" A.F.F.
110 CD	COMBINATION AUDIBLE/VISUAL SIGNALING UNIT - FIRE ALARM HORN (SPEAKER)/ FLASHING STROBE LIGHT (WALL MTD.) MOUNT AT 80" A.F.F. OR 6" BELOW CEILING WHICHEVER IS LOWER.
WP	WP DENOTES WEATHERPROOF ENCLOSURE
15/75 CD	VISUAL SIGNALING UNIT - FLASHING STROBE LIGHT ONLY (80" TO BOTTOM) (NO AUDIO DEVICE)
P	PHOTO-ELECTRIC SMOKE DETECTOR E = ELEVATOR I = IONIZATION
DD	DUCT MOUNTED SMOKE DETECTOR, WITH SAMPLE TUBE, REMOTE TEST AND HEAVY DUTY CONTROL RELAY. R = RETURN S = SUPPLY
R	TYPICAL 120V. RESIDENTIAL TYPE SMOKE DETECTOR WITH SOUNDER BASE AND BATTERY BACK-UP.
CM	TYPICAL 120V. RESIDENTIAL TYPE COMBO SMOKE DETECTOR/CARBON MONOXIDE WITH SOUNDER BASE AND BATTERY BACK-UP.
S FA	FIRE ALARM SPEAKER (WALL OR CEILING MOUNTED)
F	FIREFIGHTER'S PHONE JACK
R/F	HEAT DETECTOR, FIXED TEMPERATURE (135°) UNLESS OTHERWISE INDICATED
	FIRE ALARM FLOW SWITCH (FURNISHED BY SPRINKLER CONTRACTOR)
	FIRE ALARM TAMPER SWITCH (FURNISHED BY SPRINKLER CONTRACTOR)
MD	MOTION SENSOR - CEILING MOUNTED
M	MONITOR MODULE
FACP	FIRE ALARM CONTROL PANEL - ADDRESSABLE
RAP	FIRE ALARM REMOTE ANNUNCIATOR PANEL - FLUSH MOUNTED
FATC	FIRE ALARM TERMINAL CABINET
EWL	FIREFIGHTER'S ELEVATOR WARNING LIGHT
	DAS ANTENNA

NOTE: SOME SYMBOLS SHOWN ON THIS LEGEND MAY NOT PERTAIN TO THIS PROJECT.

ELECTRICAL INDEX

	DRAWING				
1	E-0.1	ELECTRICAL INDEX, SYMBOL LEGEND AND NOTES			
2	E-1.0	ELECTRICAL SITE PHOTOMETRICS PLAN			
3	E-1.1	ELECTRICAL SITE PLAN			
4	E-2.0	ELECTRICAL DETAILS AND SPECIFICATIONS			
5	E-3.0	ELECTRICAL RISER DIAGRAM			
6					
7					
8					
9					
10					

SHOP DRAWING REQUIREMENTS

1. CONTRACTOR SHALL SUBMIT COMPLETE DIGITAL SHOP DRAWINGS, TOGETHER AT ONE TIME AND MUST COME THROUGH THE ARCHITECT. COPIES OF MANUFACTURE'S GENERAL INFORMATION IS NOT A SHOP DRAWING AND WILL BE REJECTED. ALL SUBMITTALS SHALL BE MADE WITHIN 30 DAYS OF NOTICE TO PROCEED.
2. ALL SUBMITTALS MUST CLEARLY INDICATE EXACTLY WHICH ITEMS, FEATURES, OPTIONS, DETAILS, ETC; ARE BEING PROPOSED FOR USE. IF NOT, THE SUBMITTAL SHALL BE REJECTED.
3. SUBSTITUTIONS SHALL BE LIMITED TO ONE OF THE ALTERNATES LISTED IN THE CONSTRUCTION DOCUMENTS. PRODUCTS CONSIDERED TO BE EQUAL SHALL BE REVIEWED AND ACCEPTED BY THE ENGINEER, ARCHITECT AND OWNER FOR PROCESSING.
4. THE CONTRACTOR ASSUMES ALL RESPONSIBILITY AND ALL FINANCIAL RISKS FOR PROCEEDING WITH ANY WORK, PRIOR TO SHOP DRAWINGS PROCESSING, AND ON ANY ITEM OR WORK THAT IS AT VARIANCE TO THE CONSTRUCTION DOCUMENTS.
5. CONTRACTOR SHALL SUBMIT SCALED EQUIPMENT LAYOUTS OF ALL ELECTRICAL SPACES, ROOMS, ETC IN PLAN VIEW AND ELEVATIONS, TO THE ENGINEER FOR APPROVAL PRIOR TO ORDERING EQUIPMENT OR INSTALLING CONDUITS, ETC. THE LAYOUTS SHALL BE PRESENTED AT A SCALE OF 1/2" = 1'0"
6. IF THE CONTRACTOR SUMBITS SHOP DRAWINGS THAT ARE NOT IN COMPLIANCE WITH THE DIRECTION GIVEN HEREIN, THE ENGINEER SHALL BE ISSUED A PURCHASE ORDER OR PROVIDED WITH A PAYMENT OF $450.00 FOR THE THIRD REVIEW AND EACH SUBSEQUENT REVIEW DUE TO HIS NON-COMPLIANCE WITH 1-5 ABOVE.

FLOOD ELEVATION REQUIREMENTS

ELECTRICAL SYSTEMS, EQUIPMENT AND COMPONENTS; HEATING, VENTILATION, AIR CONDITIONING; PLUMBING APPLIANCES AND PLUMBING FIXTURES; DUCTED SYSTEMS; AND OTHER SERVICE EQUIPMENT (WATER HEATERS, GENERATORS, ELECTRICAL PANELS, POOL EQUIPMENT, ETC.) SHALL BE ELEVATED AT OR ABOVE BASE FLOOD ELEVATION (BFE) PLUS ONE FOOT OR DESIGN FLOOD ELEVATION(DFE), WHICHEVER IS HIGHER AS PER ASCE 24-14 CH. 7.0.

ABBREVIATIONS

A.C.	ABOVE COUNTER	EX	EXISTING
A.F.	ARC FAULT	ER	EXISTING RELOCATED
A.F.F.	ABOVE FINISHED FLOOR	G.F.I.	GROUND FAULT INTERRUPTER
A.S.W.	ABOVE SHOW WINDOW RCPT.	L.C.	LOCKABLE COVER
B.F.C.	BELOW FINISHED CEILING	M.H.	MOUNTING HEIGHT
B.F.G.	BELOW FINISHED GRADE	N	NEW DEVICE
C.B.	CIRCUIT BREAKER	N.F.	NON FUSED
CL	CENTER LINE	NL	NIGHT LIGHT
D	DEDICATED FOR COMPUTER, PROVIDE DEDICATED GROUND AND NEUTRAL	RE	EXISTING TO BE REMOVED
		T.C.	TERMINAL CABINET
IG	ISOLATED GROUND (ORANGE DEVICE)	T.S.	TIME SWITCH
		U.O.N.	UNLESS OTHERWISE NOTED
EM	PROVIDE EMERGENCY BATTERY PACK W/FIXTURE, CONNECT AHEAD OF ALL SWITCHES.	WP.	WEATHER PROOF ENCLOSURE
		XFMR.	TRANSFORMER.
EMS	ENERGY MANAGEMENT SYSTEM	X / E-X.XX	DETAIL / SHEET NUMBER

NOTE: SOME SYMBOLS SHOWN ON THIS LEGEND MAY NOT PERTAIN TO THIS PROJECT.

THE SCHOOL DISTRICT PALM BEACH COUNTY
Building Code Services
THIS DOCUMENT WAS REVIEWED FOR COMPLIANCE WITH ALL STATUTES, CODES, AND STANDARDS APPLICABLE TO PALM BEACH COUNTY SCHOOL DISTRICT FACILITIES.
THERE MAY BE ADDITIONAL CODE OR DISTRICT REQUIREMENTS NOT SHOWN ON THE PLANS. PLAN REVIEW DOES NOT RELIEVE THE BUILDER OR DESIGN PROFESSIONAL OF RECORD FROM FULL COMPLIANCE WITH ALL DISTRICT REQUIREMENTS AND APPLICABLE CODES.
BY: Ruben Perdomo 8:25 am, Jan 21 2026

811
SAFETY IS IN YOUR HANDS. EVERY DIG. EVERY TIME.

DELTA G CONSULTING ENGINEERS, INC.
1800 Eller Drive Suite 570,
Fort Lauderdale, FL. 33316
(954) 527-1112
CA#00009181
Joseph G SanJuan
PJT. MGR: STEPHEN BENDER
PROJECT #: 250405
GEORGE SANJUAN, P.E.
FLORIDA LICENSE #46100

This item has been digitally signed and sealed by George SanJuan on a date adjacent to the seal using a SHA authentication code.
Printed copies of this document are not considered signed and sealed and the SHA authentication code must be verified on any electronic copies.

ELECTRICAL INDEX, SYMBOL LEGEND AND NOTES PLAN

SDPBC HOPE CENTENNIAL ELEMENTARY

WEST PALM BEACH, FLORIDA

FOR: SCHOOL DISTRICT OF PALM BEACH COUNTY

MILLER LEGG
South Florida Office: 13680 NW 5th Street, Suite 200
Sunrise, Florida · 33325
954-436-7000
www.millerlegg.com

REVISIONS

CERTIFICATE OF AUTHORIZATION: LB6680

DES. | DWN. | CHK.

PROJECT / FILE NO. 24-00182

DRAWING NO. E-0.1

DATE DRAWN: 9/29/25

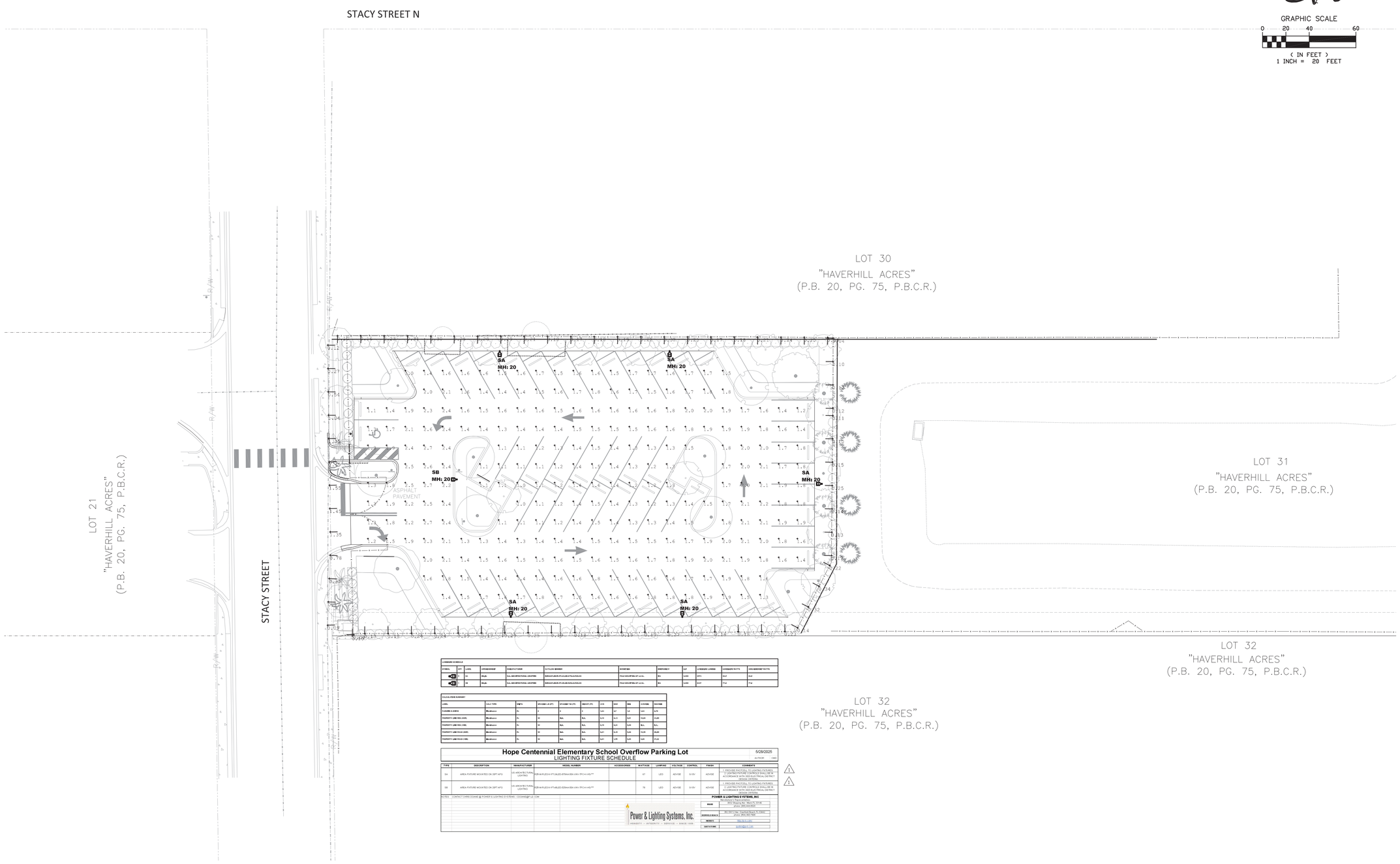

LUMINAIRE SCHEDULE													
SYMBOL	QTY	LABEL	ORIENTATION	MANUFACTURER	CATALOG NUMBER	DESCRIPTION	LAMP/ARR	EMERGENCY	LLF	LUMINAIRE LUMENS	LUMINAIRE watts	ARR/LUMINAIRE watts	
	4	SA	Wall	ALL ARCHITECTURAL LIGHTING	WDG-R-PLED-B-FT-CALED-ST-NA-UL-DV-PC-NA-HS-**	FULLY SHIELDED 30° A.F.G.	80	5.000	0.9	6.147	5.147		
	8	SB	Wall	ALL ARCHITECTURAL LIGHTING	WDG-R-PLED-B-FT-CALED-SCN-NA-UL-DV-PC-NA-HS-**	FULLY SHIELDED 30° A.F.G.	80	5.000	0.9	6.147	11.147		

PHOTOMETRIC SUMMARY											
AREA	CALC TYPE	UNITS	AVG/MIN (4:1)	AVG/MAX (4:1)	MIN/AVG (4:1)	MIN	MAX	AVG	MIN/MAX	MAX/MIN
CANOPY & AREA	Illuminance	Fc	2	4	0	0.00	0.7	1.4	0.00	4.70
PROPERTY LINE NES (VERT)	Illuminance	Fc	0	N/a	N/a	0.10	0.10	0.10	0.00	0.00
PROPERTY LINE NWS (VERT)	Illuminance	Fc	0	N/a	N/a	0.00	0.00	0.00	N/a	N/a
PROPERTY LINE ROAD (VERT)	Illuminance	Fc	0	N/a	N/a	0.00	0.00	0.00	N/a	N/a
PROPERTY LINE ROAD (HRZ)	Illuminance	Fc	0	N/a	N/a	0.21	1.30	0.54	0.00	27.00

Hope Centennial Elementary School Overflow Parking Lot
LIGHTING FIXTURE SCHEDULE

5/28/2025
AUTHOR CHKD

TYPE	DESCRIPTION	MANUFACTURER	MODEL NUMBER	ACCESSORIES	WATTAGE	LAMP/ARR	VOLTAGE	CONTROL	FINISH	COMMENTS
SA	AREA FIXTURE MOUNTED ON 20FT.AFG	US ARCHITECTURAL LIGHTING	WDG-R-PLED-B-FT-CALED-ST-NA-UL-DV-PC-NA-HS-**		67	LED	40VAC	0-10V	40VAC	1. PROVIDE PHOTOCELL TO LIGHTING FIXTURES 2. LIGHTING FIXTURE CONTROLS SHALL BE IN ACCORDANCE WITH THE SOUTH FLORIDA ELECTRICAL DISTRICT REQUIREMENTS
SB	AREA FIXTURE MOUNTED ON 20FT.AFG	US ARCHITECTURAL LIGHTING	WDG-R-PLED-B-FT-CALED-SCN-NA-UL-DV-PC-NA-HS-**		76	LED	40VAC	0-10V	40VAC	1. PROVIDE PHOTOCELL TO LIGHTING FIXTURES 2. LIGHTING FIXTURE CONTROLS SHALL BE IN ACCORDANCE WITH THE SOUTH FLORIDA ELECTRICAL DISTRICT REQUIREMENTS

NOTES: CONTACT CARRIE DUANE @ POWER & LIGHTING SYSTEMS - CDUANE@PLS-INC.COM

Power & Lighting Systems, Inc.
INTEGRITY | AUTHORITY | SERVICE | SINCE 1984

POWER & LIGHTING SYSTEMS, INC
Manufacturer's Representative
2500 Quantum Lakes Drive, Boynton Beach, FL 33426
phone: (561) 364-9000

MAIN	
JACKSONVILLE OFFICE	3621 Gill Ave. - Jacksonville Beach, FL 32250 phone: (904) 285-7000
WEBSITE	www.pls-inc.com
CONTACT EMAIL	quotes@pls-inc.com

ELECTRICAL SITE PLAN
SCALE: 1"=20'

REV.	DATE	REVISIONS
1	10/28/2025	RESPONSE TO PBCSB COMM.

SDPBC HOPE CENTENNIAL ELEMENTARY
WEST PALM BEACH, FLORIDA
FOR: SCHOOL DISTRICT OF PALM BEACH COUNTY

MILLER LEGG
South Florida Office: 13680 NW 5th Street, Suite 200
Sunrise, Florida 33325
954-436-7000
www.millerlegg.com

CERTIFICATE OF AUTHORIZATION: LB6680
DES. DWN. CHK.
PROJECT / FILE NO. 24-00182
DRAWING NO. E-1.0
DATE DRAWN 10/28/25

ELECTRICAL SITE PHOTOMETRICS PLAN

DELTA G CONSULTING ENGINEERS, INC.
1800 Eller Drive Suite 700
Fort Lauderdale, FL. 3316
(954) 527-1112
CA#00009181
Joseph G SanJuan
PJT. MGR: STEPHEN BENDER
PROJECT #: 250405
GEORGE SANJUAN, P.E.
FLORIDA LICENSE #46100

This item has been digitally signed and sealed by George SanJuan on a date adjacent to the seal using a SHA authentication code. Printed copies of this document are not considered signed and sealed and the SHA authentication code must be verified on any electronic copies.

811 SAFETY IS IN YOUR HANDS. EVERY DIG. EVERY TIME.

Building Code Services
THIS DOCUMENT WAS REVIEWED FOR COMPLIANCE WITH ALL STATUTES, CODES, AND STANDARDES APPLICABLE TO PALM BEACH COUNTY SCHOOL DISTRICT FACILITIES.
THERE MAY BE ADDITIONAL CODE OR DISTRICT REQUIREMENTS NOT SHOWN ON THE PLANS. PLAN REVIEW DOES NOT RELIEVE THE BUILDER OR DESIGN PROFESSIONAL OF RESPONSIBILITY FOR COMPLIANCE WITH ALL DISTRICT CODES, REQUIREMENTS AND APPLICABLE CODES.
BY: Ruben Perdomo 8:25 am, Jan 21 2026

BCS Received 01/20/2026 ID 31952

Z:\PROJECTS FILES\2025 JOBS\250405 HOPE CENTENNIAL PARKING LOT EXPANSION\250405 E-1.0 ELECTRICAL SITE PLAN.DWG by JASON 10/28/2025 4:12:49 PM

SDPBC PROJECT NO. 0012-2402

ADD ALTERNATE

ELECTRICAL CONTRACTOR SHALL PROVIDE AN ADD ALTERNATE IF BUILDING ENERGY MANAGEMENT SYSTEM IS EXISTING, AND SHALL PROVIDE (1) 2" CONDUIT AND PULLSTRING FOR LIGHTING CONTROL WIRING VIA EMS. FINAL CONDUIT ROUTING FROM POLE LOCATIONS TO BUILDING SHALL BE COORDINATE WITH BUILDING ENGINEER, CIVIL CONSULTANT AND ALL OTHER TRADES AND SHALL BE CONNECTED TO EXISTING EMS.

KEY NOTES

1. APPROXIMATE LOCATION OF EXISTING ELECTRICAL UTILITY POLE. REFER TO ELECTRICAL RISER DIAGRAM IN SHEET "E3.0" FOR REFERENCE ON FPL POLE MOUNTED 120/240V, 1PH, TRANSFORMER.
2. APPROXIMATE LOCATION OF AT&T FLOOR MOUNTED UTILITY BOX.
3. LOCATION OF PANELBOARD "HC". SERVICE CONDUIT FROM UTILITY POLE TO PANELBOARD SHALL BE ROUTED 36" BELOW GRADE. COORDINATE CONDUIT ROUTING OF SERVICE CONDUITS WITH FPL REPRESENTATIVE. REFER TO SHEET "E-3.0" FOR MORE INFORMATION.
4. PROVIDE MAINTENANCE RECEPTACLE ON UNISTRUT. RECEPTACLE SHALL BE GFCI PROTECTED, 20A, 120V. RECEPTACLE SHALL HAVE AN ENCLOSURE THAT IS WEATHERPROOF WHETHER OR NOT THE ATTACHMENT PLUG CAP IS INSERTED. AN OUTLET BOX HOOD INSTALLED FOR THIS PURPOSE SHALL BE LISTED AND SHALL BE IDENTIFIED AS "EXTRA DUTY". PROVIDE "IN USE" TYPE COVERS.
5. PROVIDE (1) 2" CONDUIT AND PULLSTRING FOR POLE MOUNTED SECURITY CAMERAS. COORDINATE CAMERA LOCATIONS WITH SECURITY CONSULTANT PRIOR TO BID. FINAL CONDUIT ROUTING FROM SECURITY CAMERA LOCATIONS TO BUILDING SHALL BE COORDINATE WITH SECURITY CONSULTANT, CIVIL CONSULTANT AND ALL OTHER TRADES AND SHALL BE CONNECTED TO EXISTING SECURITY SYSTEM.
6. WEATHERPROOF JUNCTION BOXES FOR IRRIGATION PUMP AND IRRIGATION CONTROL PANEL. PROVIDE (1) 1-1/4" AND (1) 3/4" CONDUIT, RESPECTIVELY. CONDUIT SHALL BE INSTALLED MINIMUM OF 30" BELOW GRADE. COORDINATE FINAL LOCATION OF IRRIGATION EQUIPMENT WITH LANDSCAPE CONSULTANT PRIOR TO BIDDING.
7. TREE PROTECTION ZONE. ELECTRICAL CONTRACTOR SHALL ROUTE CONDUITS OUTSIDE OF TREE PROTECTION ZONE AND BARRICADE. COORDINATE ALL CONDUIT ROUTING WITH LANDSCAPE CONTRACTOR PRIOR TO BIDDING.

GENERAL NOTES

1. ELECTRICAL CONTRACTOR SHALL PROVIDE ALL NECESSARY LABOR, MATERIALS, COMPONENTS, AND WIRING FOR EACH LIGHTING POLE, LIGHTING FIXTURE AND IRRIGATION PUMP FOR A COMPLETE WORKING SYSTEM. REFER TO DISTRICT MASTER SPECIFICATIONS (2023) FOR MORE INFORMATION.

2. ELECTRICAL CONDUIT ROUTING SHOWN FOR SCHEMATIC PURPOSES ONLY. CONDUIT SHALL BE INSTALLED 30" BELOW GRADE AND CONDUIT ROUTING SHALL BE COORDINATED WITH ALL OTHER TRADES AND EXISTING FIELD CONDITIONS PRIOR TO BIDDING.

3. PROVIDE PULLSTRING TO ALL POWER, DATA AND SECURITY CONDUITS.

4. POLES SHALL BE DIRECT BURIAL TYPE DESIGNED FOR USE WITH UNDERGROUND SUPPLY CONDUCTORS.

5. ALL POLES SHALL SHALL HAVE (2) CONDUITS CONCEALED WITHIN THE POLE EXTENDED DOWN FROM THE HANDHOLE FOR INCOMING AND OUTGOING BRANCH CIRCUIT WIRING.

6. ELECTRICAL CONTRACTOR SHALL INSTALL A 5/8" x 10' GROUND ROD AT EACH POLE AND EXOTHERMIC WELD GROUNDING CONDUCTOR TO POLE.

7. ALL LIGHTING POLES SHALL BE PROVIDED WITH A REMOVABLE WEATHERPROOF COVER INSTALLED BETWEEN 18" -36" ABOVE FINISH GRADE.

8. INSTALL WEATHERPROOF FUSE PER PHASE IN HANDHOLE, FUSE SHALL NOT BE PERMITTED AT FIXTURE HEAD. FUSE HOLDER SHALL INCORPORATE RUBBER BOOT ASSEMBLY.

9.UNDERGROUND CONDUIT INSTALLATION USING "DIRECTIONAL BORE" METHOD SHALL BE ALLOWED WITH CONDUITS INSTALLED AT 36" BELOW GRADE. DIRECTIONAL BORE SHALL NOT BE USED FOR

GRAPHIC SCALE
0 20 40 60
(IN FEET)
1 INCH = 20 FEET

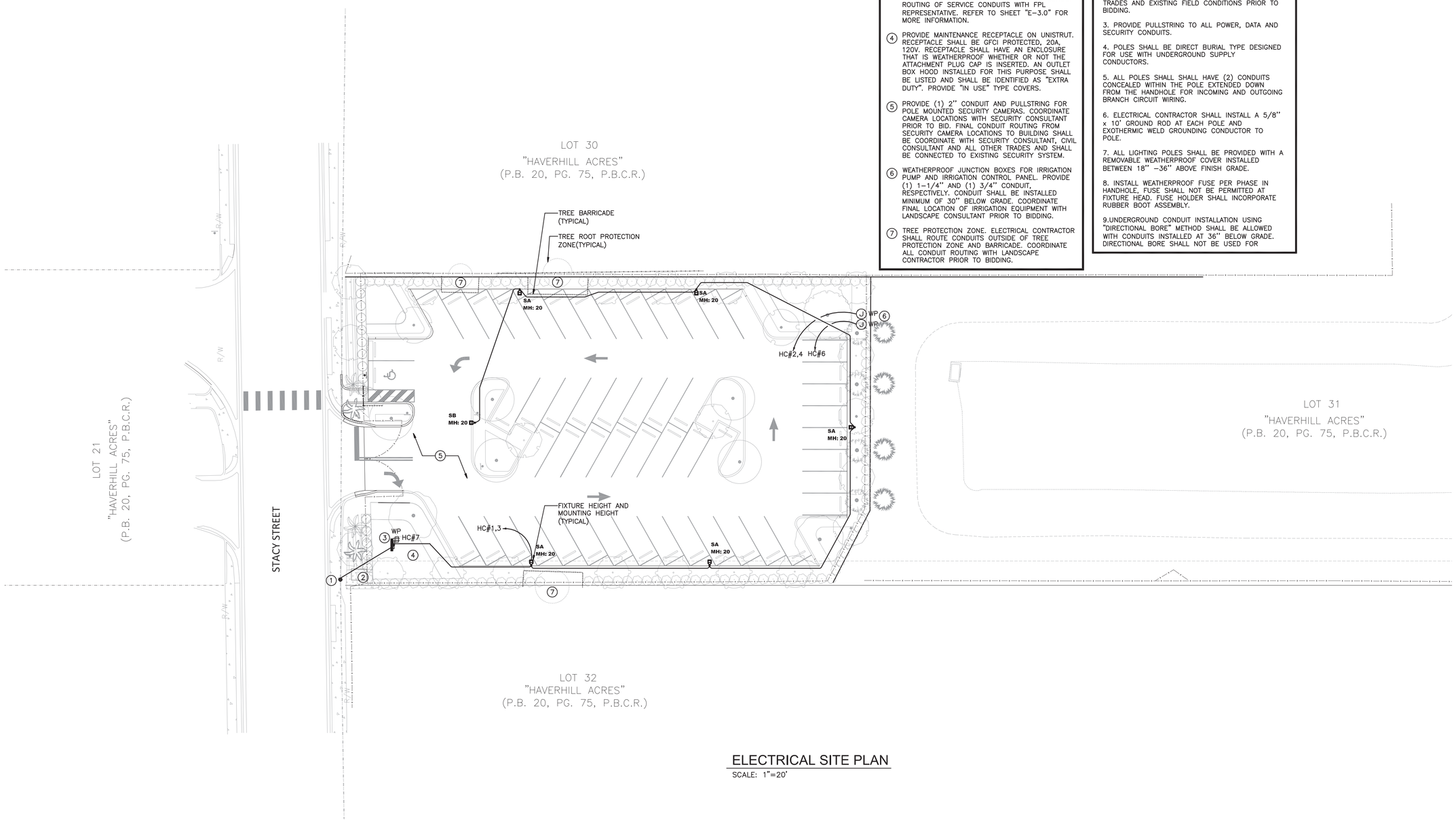

ELECTRICAL SITE PLAN
SCALE: 1"=20'

NO.	DATE	REVISIONS	CHK
1	01/15/26	RESPONSE TO PBCSB COMM.	

SDPBC HOPE CENTENNIAL ELEMENTARY
WEST PALM BEACH, FLORIDA
FOR: SCHOOL DISTRICT OF PALM BEACH COUNTY

MILLER LEGG
South Florida Office: 13680 NW 5th Street, Suite 200
Sunrise, Florida 33325
954-436-7000
www.millerlegg.com

CERTIFICATE OF AUTHORIZATION: LB6680
DES. | DWN. | CHK.
PROJECT / FILE NO. 24-00182
DRAWING NO. E-1.1
DATE DRAWN 9/29/25

ELECTRICAL SITE PLAN

DELTA G CONSULTING ENGINEERS, INC.
1800 Eller Drive Suite 570
Fort Lauderdale, FL. 33310
(954) 527-1112
CA#00009181
PJT. MGR: STEPHEN BENDER
PROJECT #: 250405
GEORGE SANJUAN, P.E.
FLORIDA LICENSE #46100

SAFETY IS IN YOUR HANDS. EVERY DIG. EVERY TIME.

This item has been digitally signed and sealed by George SanJuan on a date adjacent to the seal using a SHA authentication code. Printed copies of this document are not considered signed and sealed and the SHA authentication code must be verified on any electronic copies.

Building Code Services
THIS DOCUMENT WAS REVIEWED FOR COMPLIANCE WITH ALL STATUTES, CODES, AND STANDARDS APPLICABLE TO PALM BEACH COUNTY SCHOOL DISTRICT FACILITIES.
THERE MAY BE ADDITIONAL CODE OR DISTRICT REQUIREMENTS NOT SHOWN ON THE PLANS. PLAN REVIEW DOES NOT RELIEVE THE BUILDER OR DESIGN PROFESSIONAL OF RECORD FROM FULL COMPLIANCE WITH ALL DISTRICT REQUIREMENTS AND APPLICABLE CODES.
BY: Ruben Perdomo 8:25 am, Jan 21 2026

Z:\PROJECTS FILES\2025 JOBS\250405 HOPE CENTENNIAL PARKING LOT EXPANSION\250405 E-1.1 ELECTRICAL SITE PLAN.DWG by YAZMIN 9/29/2025 2:58:50 PM

BCS Received 01/20/2026 ID 31952

SDPBC PROJECT NO. 0012-2402

Electronic Timer Control - ET90215CR

INTERMATIC

Electronic Timer Control - Astronomic 365-Day 2-Circuit Electronic Control, 120-277 VAC, 50/60 Hz, 2-SPDT, Outdoor Metal Enclosure, Ethernet Optional

Item ET90215CR

PRODUCT DESCRIPTION

The ET90000 Series combines powerful and intuitive scheduling with truly maintenance-free convenience and included capability of a 4-hour override. The POApp provides real-time remote control and the USB connection and Ethernet capabilities enable in-field updates. These products can be used to help meet Title 24 requirements.

FEATURES

- Automatic input voltage selection from 120 to 277 VAC, 50/60 Hz
- Over 2,000 events plus holiday schedules
- Allows for simple override control when paired with MS-101-WH Momentary Switch (sold separately)
- Advanced scheduling including relative events, such as fourth Thursday of November or first week of year
- 30 A rated contacts
- 100-hour supercapacitor eliminates the need for batteries
- USB connection for uploading, downloading and transferring programs
- Easy-to-follow on-screen menus for programming to-the-minute accuracy
- Non-volatile memory protects programming indefinitely
- Firmware can be upgraded in-field via USB or Ethernet
- Internally expandable, in 4-circuit increments, up to 16-circuits for 4, 8, and 12-circuit models

APPLICATIONS

- Indoor Lighting Control
- Outdoor Lighting Control
- Timing/Scheduling ON/OFF
- Machinery & Pump Controls

TECHNICAL DATA

General	
Model Number	ET90215CR
Description	Astronomic 365-Day 2-Circuit Electronic Control, 120-277 VAC, 50/60 Hz, 2-SPDT, Outdoor Metal Enclosure, Ethernet Optional
UPC Code	078275124882
Brand	Intermatic
Country of Origin (Intermatic)	MEXICO
Warranty Period	3-Year limited

Control Specifications	
Minimum ON/OFF Times	1 Sec
Minimum Pulse Time	1 sec
Maximum Pulse Time	23 hours, 59 minutes
Maximum ON/OFF Times	365 days
Maximum ON/OFF Operations	2000
Setpoint Program Count	2000
ON/OFF Operations	2000
Operation Features	Astronomic; Holiday
Operation Mode	365 day
Data Transfer Options	Ethernet Optional/USB
Daylight Savings Adjustment	Automatic

Technical specifications and other information are subject to change without notice. Images can vary from original. © 02/20/2025 1/4

J.S. ARCHITECTURAL LIGHTING

RAZAR SERIES - LED

SPECIFICATIONS

POLE DRILLING TEMPLATE

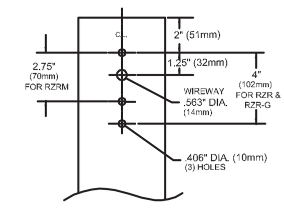

EPA & WEIGHT

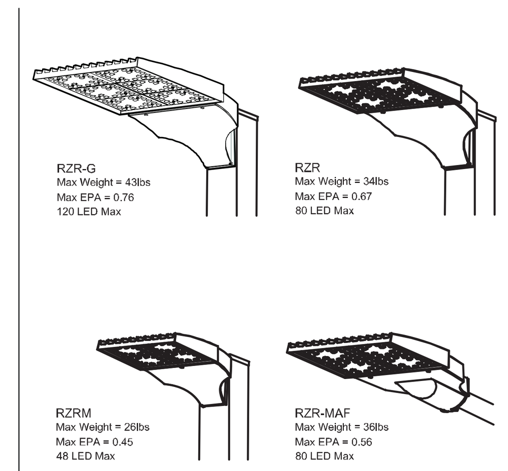

PLEDTM MODULES

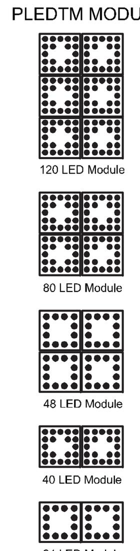

ORDERING INFORMATION

Spec/Order Example: RZR/PLED-IV/80LED-700mA/CW/UNV/8019-S

Luminaire	Optics (PLED Distribution Type)	# of LEDs	Drive Current	Color Temp - CCT	Voltage	Mounting	Finish	Options
RZR-G	☐ PLED-II	RZR-G: ☐ 120LED	☐ 1400mA1	☐ 27K (2700K)	UNV (120-277)	Arm Mount: 1	Standard Textured Finish: ☐ Black 9005-T	☐ Internal House Side Shield Inc. LED Count (Example: HS-PLED/48) HS-PLED
	☐ PLED-II-FR	☐ 80LED	☐ 1225mA1	☐ 30K (3000K)	347	2-180	☐ White 9003-T	☐ External Glare Shield 4 Sided EGS4
	☐ PLED-II-MIL		☐ 1050mA	☐ 40K (4000K)	480	2-90	☐ Grey 7004-T	☐ External Glare Shield 3 Sided Rear Wedge EGS3W
RZR / RZR-MAF	☐ PLED-III	RZR / RZR-MAF: ☐ 80LED	☐ 875mA	☐ 50K (5000K)		3-90	☐ Dark Bronze 8019-T	☐ Round Pole Adapter RPA
	☐ PLED-III-W	☐ 40LED	☐ 700mA	☐ TRA True Amber		3-120	☐ Green 6005-T	☐ Twist Lock Receptable Only TPR
	☐ PLED-IV		☐ 525mA	Consult Factory for Other LED Color, CCT, & CRI Options		4-90	Premium Finishes: ☐ Rust	☐ 7-Pin Twist Lock Receptable Only TPR7
	☐ PLED-IV-FT		☐ 350mA			Wall Mount: WM	☐ Patina Copper PC	☐ High-Low Dimming for Switch by Others/Select Levels 50/100 or 25/100 (Example: HLSW/25) HLSW
RZRM	☐ PLED-VSQ-N	RZRM: ☐ 48LED				WM - Wall Mount provided with mounting bracket and cover.	For smooth finish replace suffix "T" with suffix "S" (Example: 9500-S)	☐ Twist Lock Photocell + Voltage (Example: TPC347V) TPC+V
	☐ PLED-V -SQ-M	☐ 24LED					Consult factor for custom colors	☐ Photo Cell + Voltage (Example: PC120V) PC+V
	☐ PLED-V-SQ-W							☐ Single Fuse (120V, 277V) SF
								☐ Double Fuse (208V, 240V) DF
								☐ Blue-Tooth Programmable Photo/Motion Sensor (Factory - Motion 50/100; Photo 75fc) MS-F311

NOTES:
1 - 1400mA & 1225mA drive currents not available in RZRM
2 - TRA available In 350mA & 525mA drive currents only.

Consult Factory for Other Drive Currents

U.S. Pole Company Inc. An Employee Owned Company | 660 West Avenue O, Palmdale, CA 93551 Phone (661) 233-2000 www.usaltg.com

MADE IN THE USA 3

J.S. ARCHITECTURAL LIGHTING

AREA & ROADWAY LIGHTING

PROJECT NAME:

PROJECT TYPE:

RAZAR SERIES - LED

LOW PROFILE AREA LUMINAIRE

Optical Housing
Heavy cast aluminum assembly minimum wall thickness .188". LED Module mounting area is machined to within a 0.002" surface flatness variance for maximum surface contact and thermal conductivity from the LED modules to the radiating fins. Passive radiating fins above the LED Optics provide superior thermal management and long LED life. The optical and electrical compartments are integrated with the support arm to create one assembly. Cast and hinged driver compartment cover allows access to the drivers and wiring.

Electrical Housing w/ Integrated Arm
Heavy cast aluminum assembly with integral cooling ribs surrounding the electrical compartment and a flat surface on the top of the arm to accommodate a photocell receptacle. Solid barrier wall separates optical and electrical compartments. The optical compartment and electrical compartment with the integrated support arm combine to create one assembly. Minimum wall thickness is .188". Cast and hinged driver assembly cover is integrated with wiring compartment cover.

Mast Arm Fitter/Electrical Housing
Replaces standard Electrical Housing. Fits standard 2 3/8" O.D. horizontal tenon. Two (2) straps with two (2) bolts each encircle the lower half of the tenon. Upper half of the tenon rests on self-centering steps that position the angle of the luminaire at 0°, +1.5°, +1.5 or +3° up from the horizontal. All hardware is stainless steel.

PLEDTM Optics
Emitters (LED's) are arrayed on a metal core PCB panel with each emitter located on a copper thermal transfer pad and enclosed by an LED refractor. LED optics completely seal each individual emitter to meet an IP66 rating. In asymmetric distributions, a micro-reflector inside the refractor re-directs the house side emitter output towards the street side, maximizing usable light. Optional house side shields are available that cover each individual optic. Refractors are injection molded H12 acrylic. Each LED refractor is sealed to the PCB over an emitter and all refractors are retained by an aluminum frame. Any one Panel, or group of Panels in a luminaire, have the same optical pattern. LED refractors produce standard site/area distributions. Panels are field replaceable and field rotatable in 90° increments. Quick-disconnects are provided above each panel for fast field replacement. All fixture optical options will provide a "U0" no uplight optical package and is are dark sky friendly.

LED Emitters
LED thermal management is designed to maintain LED operating temperature below 90 °C, well below the manufacturers thermal max of 150 °C for long life, high lumen maintenance and color stabilit. High Power White LED's are driven between 350mA and 875mA for a maximum output of 2.5 Watts nominal. LED's are available in standard Warm White (2700K & 3000K), Neutral White (4000K), or Cool White (5000K). All Standard LED's have a minimum of 70 CRI. Consult Factory for other LED options. Lumen Maintenance of L94 at 60,000 hours (TM-21 calculated at 6x Test Time).

True Amber LED's TRA-True Amber LED's emit light in the amber spectral bandwidth centered on 585-590nm. True Amber has negligible blue light and is suitable for wildlife.

LED Driver
Constant current electronic with a power factor of >.90 and a minimum operating temperature of -40°F/-40°C. Driver(s) is/are UL and cUL recognized. In-line terminal blocks facilitate wiring between the driver and optical arrays. Drivers accept an input of 120-277V, 50/60Hz or 347V-480V, 50/60Hz. 0 - 10V dimmable driver is standard. Driver has a minimum of 3KV internal surge protection. Luminaire supplied with a separate 20KV surge protector for field installation.

Finish
Super TGIC polyester powder coating is applied onto a metal substrate this has been pretreated with a four-stage process for maximum adhesion and color retention. The top coat is baked at 400° F for maximum hardness and exterior durability.

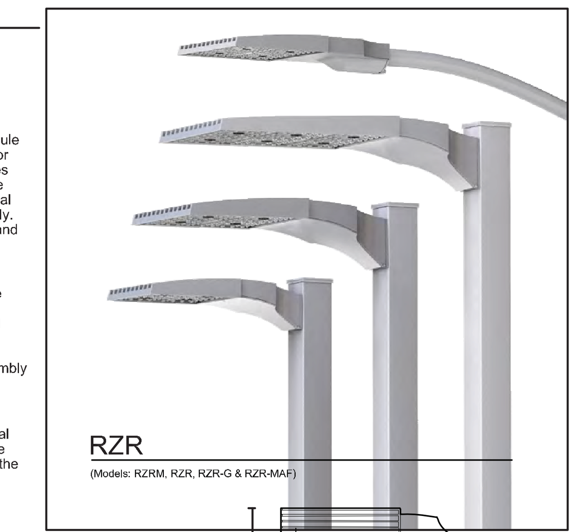

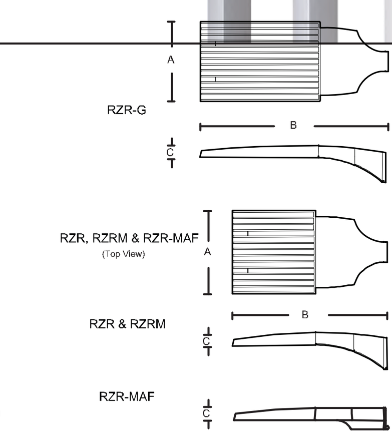

Fixture	A	B	C	D
RZR-G	15" 381mm	36.5" 927mm	3" 76mm	7" 187mm
RZR	14.75" 375mm	28.25" 718mm	2.75" 70mm	6.5" 165mm
RZRM	11.5" 292mm	22" 559mm	2.5" 64mm	5.25" 133mm
RZR-MAF	15" 381mm	28.25" 724mm	2.5" 64mm	4" 102mm

U.L. Listed for Wet Location

2024281

U.S. Pole Company Inc An Employee Owned Company | 660 West Avenue O, Palmdale, CA 93551 Phone (661) 233-2000 www.usaltg.com

MADE IN THE USA 1

811

SAFETY IS IN YOUR HANDS. EVERY DIG. EVERY TIME.

DELTA G CONSULTING ENGINEERS, INC.
1800 Eller Drive Suite 70
Fort Lauderdale, FL. 3316
(954) 527-1112
CA#00009181

Joseph G SanJuan
Digitally signed by Joseph G SanJuan
DN: CN=Joseph G SanJuan, dnQualifier=A01410D000019442ADCF1E002180DC, O=DELTA G CONSULTING ENGINEERS, C=US
Date: 2026.01.19 11:07:59-05'00'

PJT. MGR: STEPHEN BENDER
PROJECT #: 250405

GEORGE SANJUAN, P.E.
FLORIDA LICENSE #46100

This item has been digitally signed and sealed by George SanJuan on a date adjacent to the seal using a SHA authentication code. Printed copies of this document are not considered signed and sealed and the SHA authentication code must be verified on any electronic copies.

ELECTRICAL DETAILS AND SPECIFICATIONS

SDPBC HOPE CENTENNIAL ELEMENTARY

WEST PALM BEACH, FLORIDA

FOR: SCHOOL DISTRICT OF PALM BEACH COUNTY

REVISIONS

MILLER LEGG
South Florida Office: 13680 NW 5th Street, Suite 200
Sunrise, Florida · 33325
954-436-7000
www.millerlegg.com

CERTIFICATE OF AUTHORIZATION: LB6680

DES.	DWN.	CHK.

PROJECT / FILE NO. 24-00182

DRAWING NO. E-2.0

DATE DRAWN: 9/29/25

Building Code Services

THIS DOCUMENT WAS REVIEWED FOR COMPLIANCE WITH ALL STATUTES, CODES, AND STANDARDS APPLICABLE TO PALM BEACH COUNTY SCHOOL DISTRICT FACILITIES.

THERE MAY BE ADDITIONAL CODE OR DISTRICT REQUIREMENTS NOT SHOWN ON THE PLANS. PLAN REVIEW DOES NOT RELIEVE THE BUILDER OR DESIGN PROFESSIONAL OF RECORD FROM FULL COMPLIANCE WITH ALL DISTRICT REQUIREMENTS AND APPLICABLE CODES.

BY: Ruben Perdomo 8:25 am, Jan 21 2026

Z:\PROJECTS FILES\2025 JOBS\250405 HOPE CENTENNIAL PARKING LOT EXPANSION\250405 E-2.0 ELECTRICAL DETAILS.DWG by JASON 9/23/2025 4:40:27 PM

BCS Received 01/20/2026 ID 31952

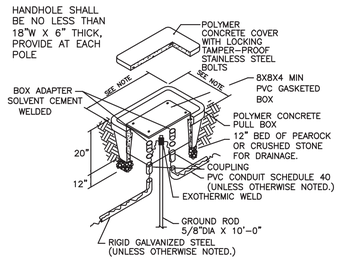

3 E-3.0 TYPICAL HANDHOLE DETAIL

SCALE: N.T.S.

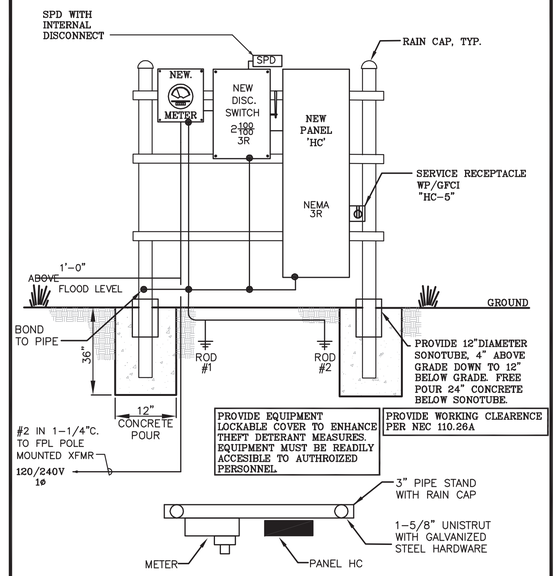

2 E-3.0 ELECTRIC SERVICE & PIPE STAND DETAIL

SCALE: NTS

GENERAL NOTES:

1. ALL EXTERIOR ELECTRICAL EQUIPMENT SHALL BE NEMA 3R AND WEATHERPROOF.

EXISTING TO REMAIN
NEW CONSTRUCTION

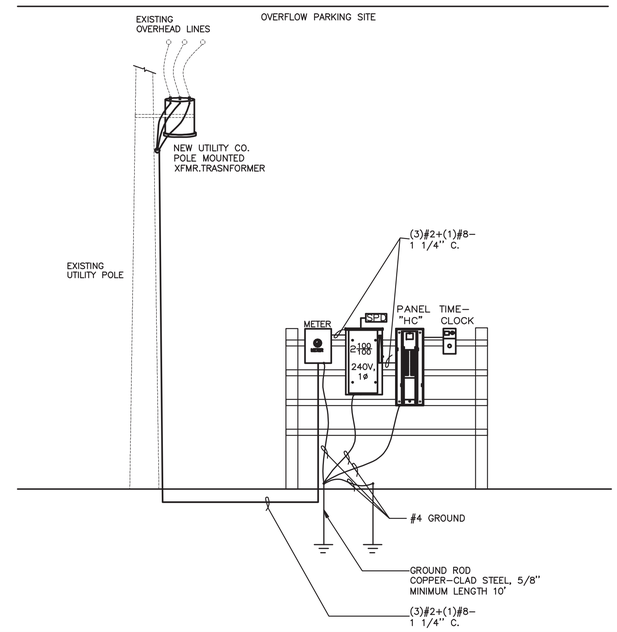

1 E-3.0 ELECTRICAL RISER DIAGRAM

SCALE: NTS

NOTE:
POLE SUPPLIER SHALL CERTIFY THAT POLE, BASE, & FIXTURE MEETS 190 MPH WIND LOAD CRITERIA AND SHALL PROVIDE SIGNED & SEALED CALCULATIONS BY A REGISTERED FLORIDA ENGINEER.

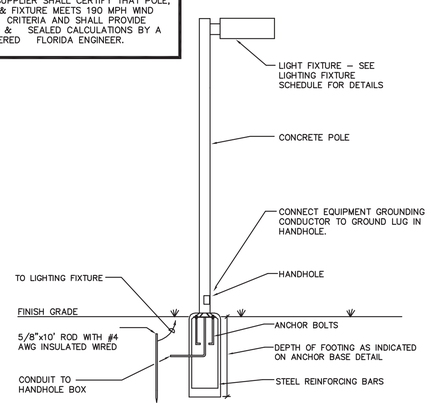

4 E-3.0 TYPICAL PARKING POLE DETAIL

SCALE: N.T.S.

PANEL "HC"

TYPE: SQUARE D OR EQUAL APPROVED
MOUNTING: SURFACE
ENCLOSURE: NEMA 3R
SUPPLY FROM: SERVICE DISCONNECT

RATED VOLTAGE: 120/240V, 1Ph, 3W
BUS RATING: 100 AMPS
A.I.C. RATING: 42 KAIC
BRANCH POLES: 18 CIRCUITS

MAINS: M.L.O.
FEED LOCATION: BOTTOM
SYSTEM: NORMAL
LOCATION: PARKING LOT ON UNISTRUT

ID	LOAD SERVED	COND.	EQ. GND.	WIRE AWG	TYPE	TRIP	CKT	Phase A [kVA]		Phase B [kVA]		CKT	TRIP	TYPE	WIRE AWG	EQ. GND.	COND.	LOAD SERVED	ID
L	SITE LIGHTING POLE	3/4''	10	8	TS	20A/2P	1	0.2	3.4			2	60A/3P	-	4	10	1-1/4''	IRRIGATION CONTROLLER PUMP	M
L							3			0.2	3.4	4							M
R	CONVENIENCE RECEPTACLES	1/2''	10	10	GFCI	20A	5	0.2	0.3			6	20A	-	10	10	3/4''	IRRIGATION CONTROLLER	O
O	TIME-CLOCK CONTROLLER	1/2''	10	10	-	20A	7			0.1	-	8	-	-	-	-	-	SPACE	
	SPACE	-	-	-	-	-	9	-	-			10	-	-	-	-	-	SPACE	
	SPACE	-	-	-	-	-	11			-	-	12	-	-	-	-	-	SPACE	
	SPACE	-	-	-	-	-	13	-	-			14	-	-	-	-	-	SPACE	
	SPACE	-	-	-	-	-	15			-	-	16	-	-	-	-	-	SPACE	
	SPACE	-	-	-	-	-	17	-	-			18	-	-	-	-	-	SPACE	
								4.1		3.7									
								UNBALANCE		5.4%									

ID:
(L) LIGHTING LOAD
(M) MOTOR LOAD
(O) OTHER LOAD
(R) RECEPTACLE LOAD

TYPE:
TS - TIME SWITCH CONTROL
GFCI - GROUND FAULT CIRCUIT INTERRUPTER

DEMAND LOAD CALCULATION:				
TOTAL CONNECTED LOAD:		=	7.8	KVA
RECEP. LOAD		=	0.2	KVA
1ST 10 KVA @	100%	=	0.2	KVA
REMAINING @.....	50%	=	0.0	KVA
KITCHEN LOADS @	100%	=	0.0	KVA
LIGHTING LOADS @	125%	=	0.5	KVA
OTHER LOADS @	100%	=	0.4	KVA
LARGEST MOTOR LOAD @	125%	=		KVA
OTHER MOTOR LOAD @	100%	=	6.8	KVA
TOTAL MOTOR LOADS @	100%	=	6.8	KVA
TOTAL KVA A/C LOADS @.....	100%	=	0.0	KVA
TOTAL NON CONCURENT LOADS		=	0.0	KVA
TOTAL DEMAND LOAD:		=	7.9	KVA
DEMAND AMPERES:		=	**33**	AMPS

NOTE:

811. SAFETY IS IN YOUR HANDS. EVERY DIG. EVERY TIME.

DELTA G CONSULTING ENGINEERS, INC.
1800 Eller Drive Suite 70
Fort Lauderdale, FL. 3316
(954) 527-1112
CA#00009181
Joseph G SanJuan
PJT. MGR: STEPHEN BENDER
PROJECT #: 250405
GEORGE SANJUAN, P.E.
FLORIDA LICENSE #46100

This item has been digitally signed and sealed by George SanJuan on a date adjacent to the seal using a SHA authentication code. Printed copies of this document are not considered signed and sealed and the SHA authentication code must be verified on any electronic copies.

Z:\PROJECTS FILES\2025 JOBS\250405 HOPE CENTENNIAL PARKING LOT EXPANSION\250405 E-3.0 ELECTRICAL RISER DIAGRAM.DWG by JASON 9/23/2025 5:09:27 PM

BCS Received 01/20/2026 ID 31952

Building Code Services
THIS DOCUMENT WAS REVIEWED FOR COMPLIANCE WITH ALL STATUTES, CODES, AND STANDARDS APPLICABLE TO PALM BEACH COUNTY SCHOOL DISTRICT FACILITIES.
THERE MAY BE ADDITIONAL CODE OR DISTRICT REQUIREMENTS NOT SHOWN ON THIS PLANS. PLAN REVIEW DOES NOT RELIEVE THE BUILDER OR DESIGN PROFESSIONAL OF RECORD FROM FULL COMPLIANCE WITH ALL DISTRICT REQUIREMENTS AND APPLICABLE CODES.
BY: Ruben Perdomo 8:25 am, Jan 21 2026

REVISIONS

SDPBC HOPE CENTENNIAL ELEMENTARY

WEST PALM BEACH, FLORIDA
FOR: SCHOOL DISTRICT OF PALM BEACH COUNTY

ELECTRICAL RISER DIAGRAM

MILLER LEGG
South Florida Office: 13680 NW 5th Street, Suite 200
Sunrise, Florida 33325
954-436-7000
www.millerlegg.com

CERTIFICATE OF AUTHORIZATION: LB6680

DES. DWN. CHK.

PROJECT / FILE NO. 24-00182

DRAWING NO. E-3.0

DATE DRAWN 9/29/25